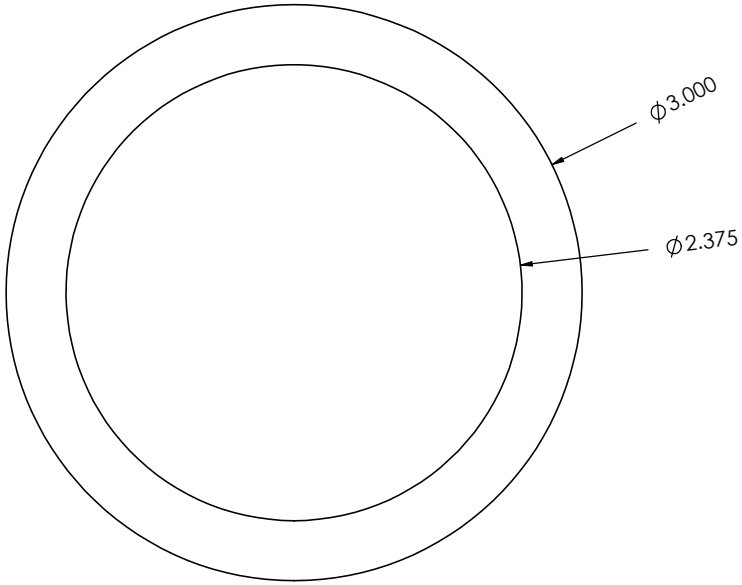

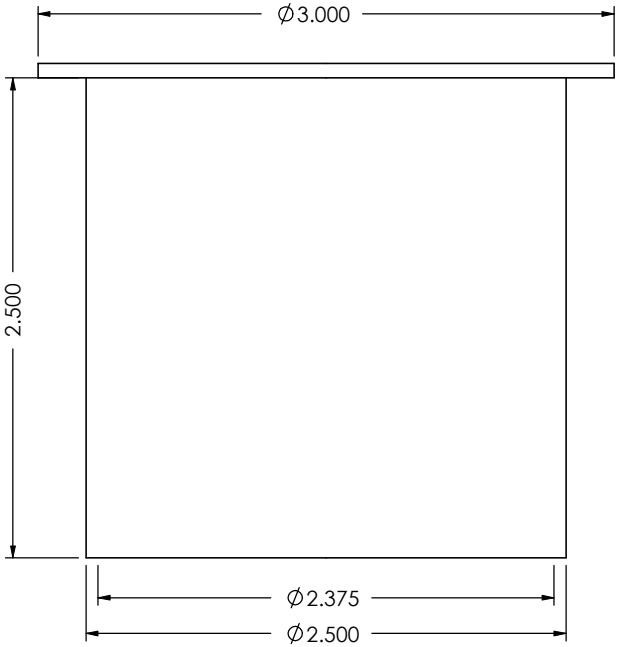

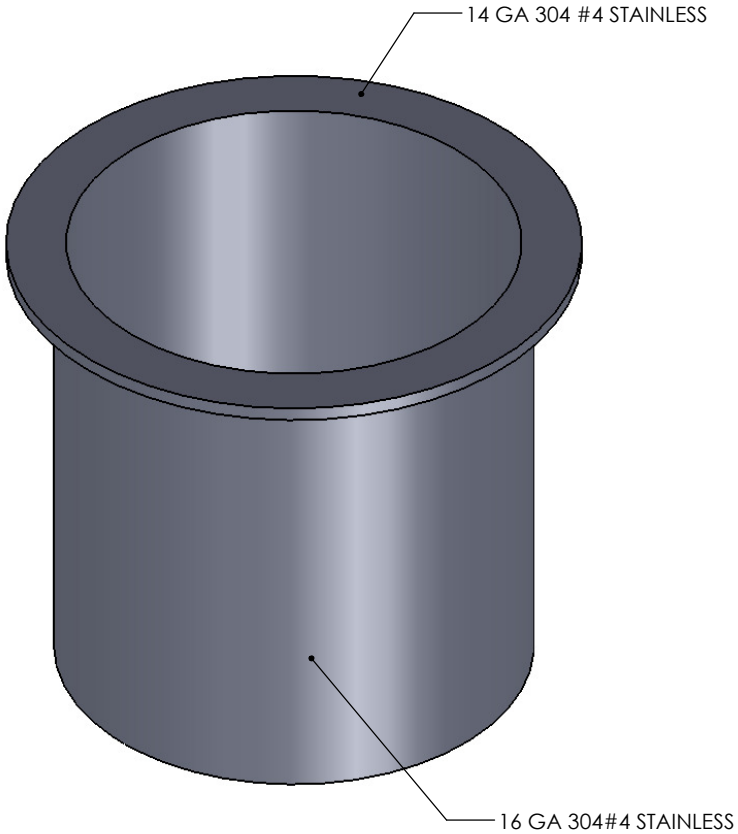

PROPRIETARY AND CONFIDENTIAL

THE INFORMATION CONTAINED IN THIS DRAWING IS THE SOLE PROPERTY OF INTER DYNE SYSTEMS. ANY REPRODUCTION IN PART OR AS A WHOLE WITHOUT THE WRITTEN PERMISSION OF INTERDYNE SYSTEMS IS PROHIBITED.

UNLESS OTHERWISE SPECIFIED:

DIMENSIONS ARE IN INCHES
TOLERANCES:
FRACTIONAL ±
ANGULAR: MACH ± BEND ±
TWO PLACE DECIMAL ±
THREE PLACE DECIMAL ±

INTERPRET GEOMETRIC TOLERANCING PER:

MATERIAL
STAINLESS STEEL 14 GA

FINISH
TYPE 304 #4

DO NOT SCALE DRAWING

	NAME	DATE
DRAWN	CJM	11/7/2017
CHECKED		
ENG APPR.		
MFG APPR.		
Q.A.		

COMMENTS:

INTER DYNE SYSTEM, INC
676 E.Ellis Rd., Norton Shores, MI 49441
Phone: 231-799-8760 Fax: 231-799-9690

TITLE:

GROM-VPS

SIZE	DWG. NO.	REV
A		

SCALE: 1:5 | WEIGHT: | SHEET 1 OF 1

5 4 3 2 1