"ASG" Acrylic Splash Guard

Clear acrylic splash guard

Features

- 30"w x 12"h x 3/4"d
- Eased and flame polished edges
- *OPTIONAL* (Additional Cost) S/S U-Channel either bottom and side or welded L-shape

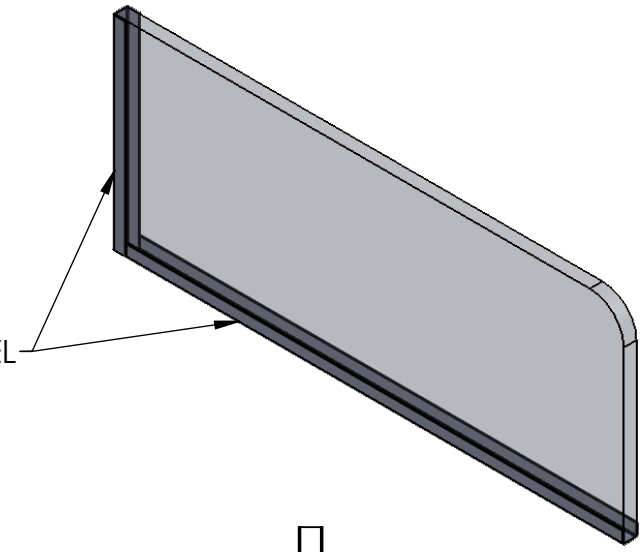

Product Dimensions

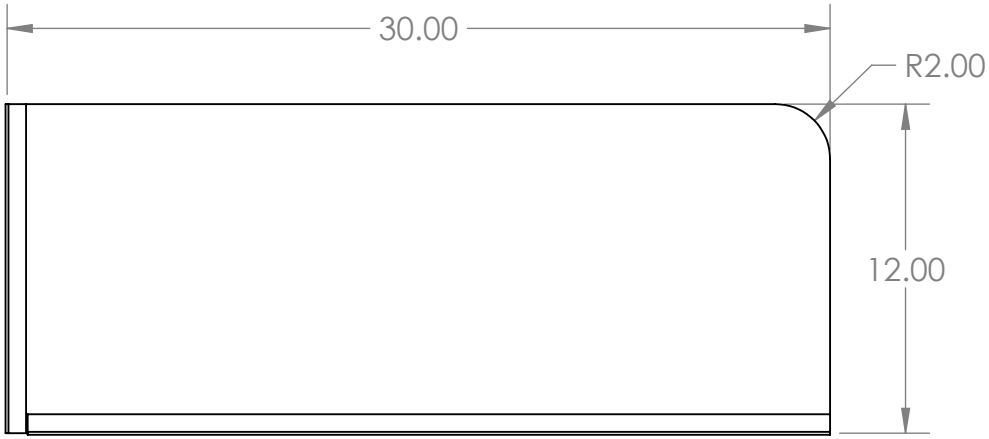

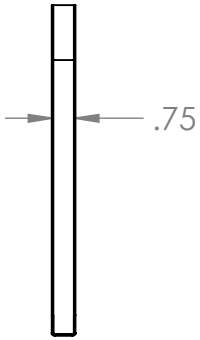

UNLESS OTHERWISE SPECIFIED:
DIMENSIONS ARE IN INCHES
TOLERANCES:
ANGULAR ±2.50°
ONE-PLACE ±0.5
TWO-PLACE ±0.13

PROPRIETARY AND CONFIDENTIAL
THE INFORMATION CONTAINED IN THIS DRAWING IS THE SOLE PROPERTY OF INTER DYNE SYSTEMS. ANY REPRODUCTION IN PART OR AS A WHOLE WITHOUT THE WRITTEN PERMISSION OF INTER DYNE SYSTEMS IS PROHIBITED.

REV.	REVISION DESCRIPTION	DRAWN	CHECKED	DATE
A	STANDARD PRINT CREATED	ASR		10/01/20

COMMENTS:

QTY: N/A

INTER DYNE
SYSTEMS, INC
676 E. Ellis Rd., Norton Shores, MI 49441
Phone: 231-799-8760 Fax: 231-799-9690

PART NO.
ASG-3012-.75

MATERIAL: **.75IN. ACRYLIC** FINISH: **CLEAR**