"ASGN" Acrylic Notched Splash Guard

Clear acrylic splash guard
with a notch

Features

- 30"w x 18"h x 1/2"d
- 4" x 1" notch
- Eased and flame polished edges
- *OPTIONAL* (Additional Cost) S/S U-Channel bottom and side

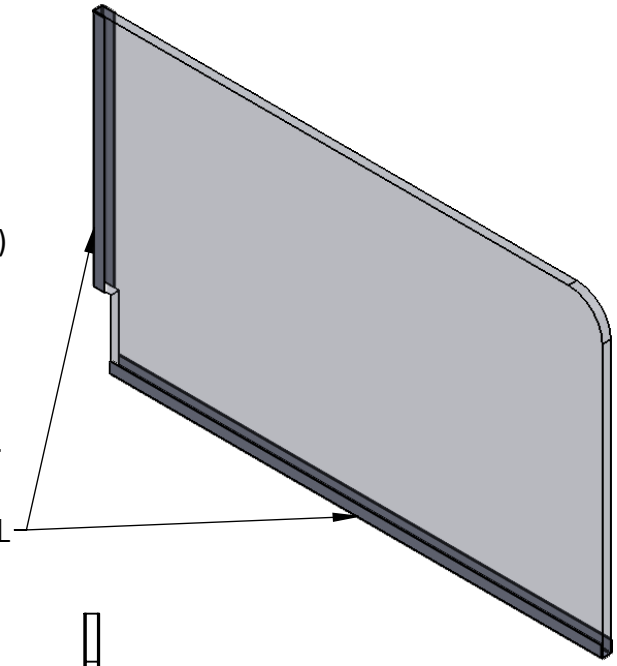

Product Dimensions

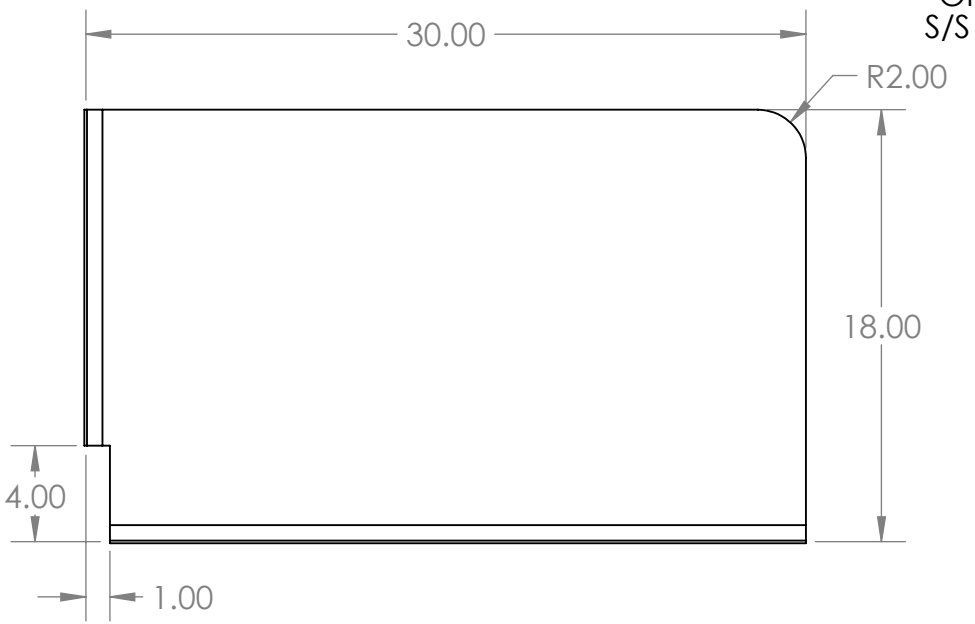

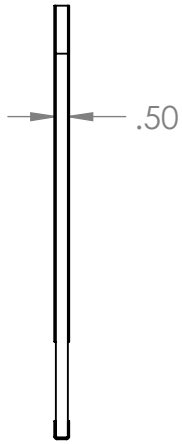

UNLESS OTHERWISE SPECIFIED:
DIMENSIONS ARE IN INCHES
TOLERANCES:
ANGULAR ±2.50°
ONE-PLACE ±0.5
TWO-PLACE ±0.13

PROPRIETARY AND CONFIDENTIAL
THE INFORMATION CONTAINED IN THIS DRAWING IS THE SOLE PROPERTY OF INTER DYNE SYSTEMS. ANY REPRODUCTION IN PART OR AS A WHOLE WITHOUT THE WRITTEN PERMISSION OF INTER DYNE SYSTEMS IS PROHIBITED.

REV.	REVISION DESCRIPTION	DRAWN	CHECKED	DATE
A	STANDARD PRINT CREATED	ASR		10/01/20

COMMENTS:

QTY: N/A

INTER DYNE
SYSTEMS, INC
676 E. Ellis Rd., Norton Shores, MI 49441
Phone: 231-799-8760 Fax: 231-799-9690

PART NO.
ASGN-3018-.50

MATERIAL: **.50IN. ACRYLIC** FINISH: **CLEAR**